LED Pendant

PD22332
INSTALLATION SHEET

START FROM HERE

- Make sure power is completely off at the fuse box.
- Have your fixture installed by a qualified licensed electrician
- Prepare everything in a clear area.
- Wear gloves at all times during this installation.
- Read instructions carefully before you start assembly.
- Keep this instruction sheet for future reference.

Technical Support: 1-855-855-8926

Please Note:
- For dimming, a TRIAC or an ELV type of dimmer is required.

1. Remove the fixture from its original packaging. Remove the mounting plate **(1c)** from the canopy **(2a)** by rotating the canopy counter clockwise. Attach the mounting plate **(1c)** to the electrical junction box **(1a)** using the two screws **(1d)** provided in the hardware package.Select the desired length you would like the fixture to hang down from the ceiling (120” maximum). To set the fixture hanging height, simply push in the cord grip **(2b)** at the canopy.

2. Connect all wiring with the provided marrettes **(1b)** (white to white “N”, black to black “L”, ground to ground “G”). Attach the canopy **(2a)** to the mounting plate **(1c)** by rotating it clockwise**.**

3. You have now completed the installation of your fixture, enjoy.

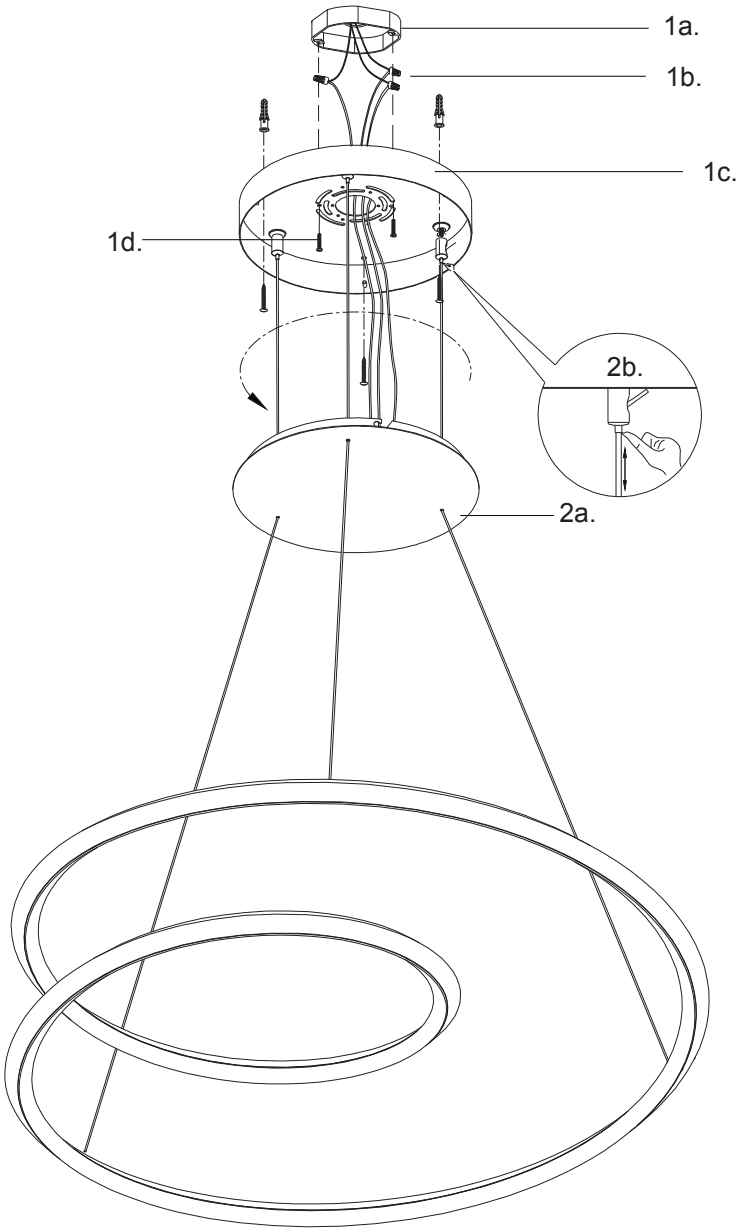

KUZCO
19054 28th Avenue Surrey, BC Canada V3Z 6M3
T: 604 538 7162 TF: 1-855 85 KUZCO F: 604 538 7196
W: kuzcolighting.com
20190102